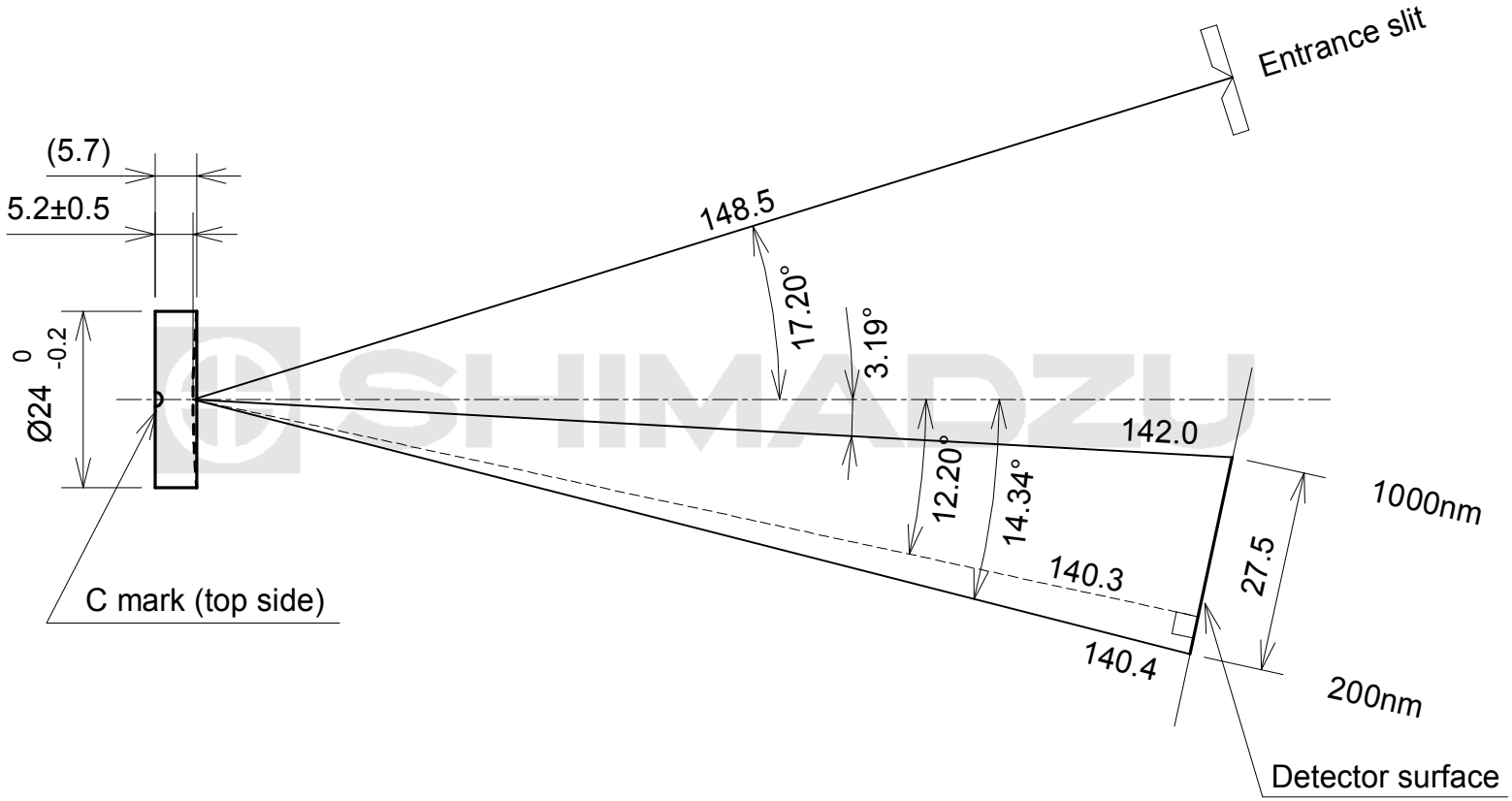Code number	P0240-01
Groove density	240grooves/mm
Dispersion	29.1nm/mm
Dimensions	Ø24mm
Central thickness	5.2mm