Code number	P1400-01
Groove density	1400grooves/mm
Dispersion	8.4nm/mm
Dimensions	25(W)x25(H)mm
Central thickness	7.0mm

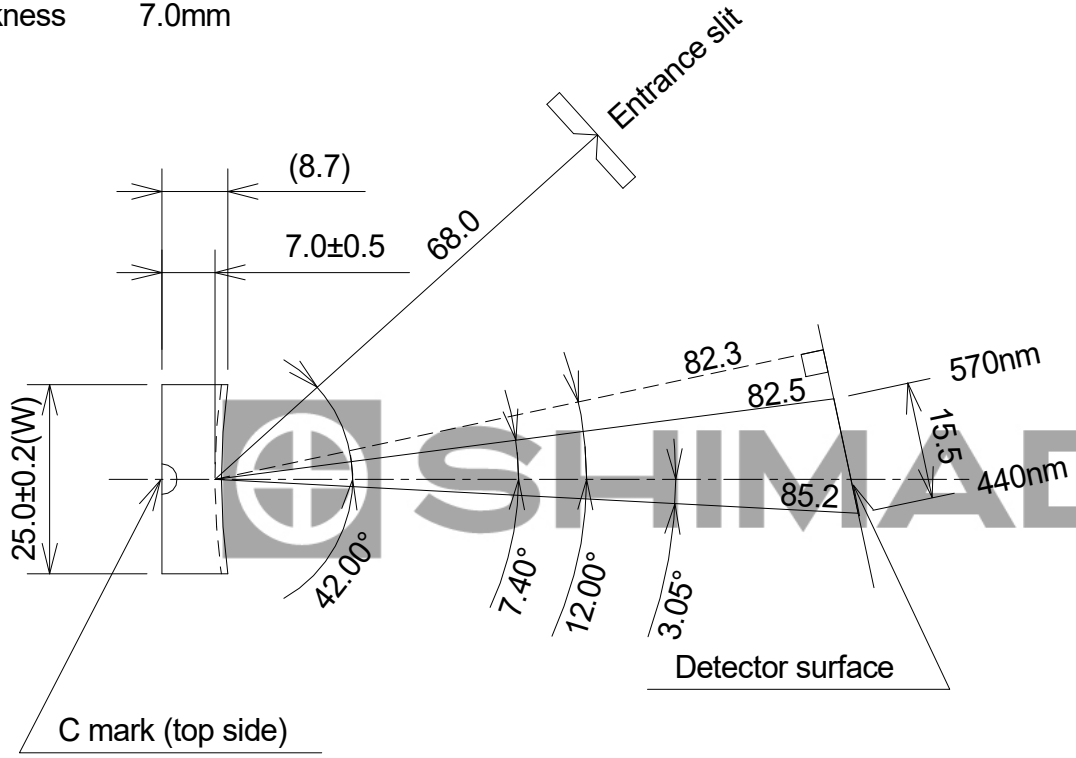

SHIMADZU